ITEM	PART NAME	PART NUMBER	QTY	MATERIAL
1	ROTATING BELLOWS ASSEMBLY	FS18076M69–50	1	Al CARBON/HAST C/316/AFLAS
2	BELLOWS ASSEMBLY PKG. (PART OF ITEM# 1)	FS568–AF–226	1	AFLAS
3	STATIONARY MATING RING	FS19288–R03–50	1	17–4 S.S.
4	MATING RING PKG.	FS5.0M–AF–61.0	1	AFLAS

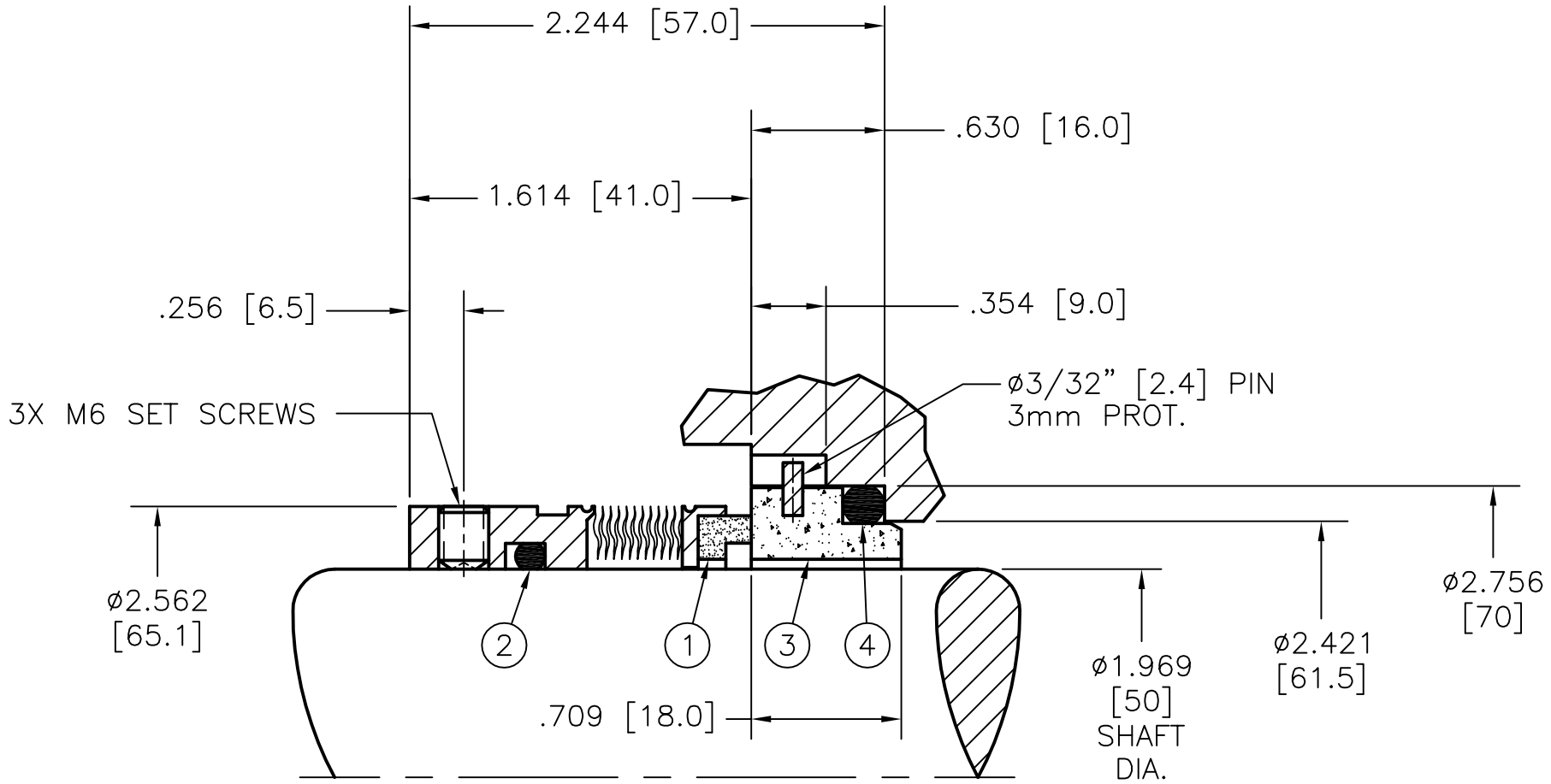

CUSTOMER:	JOB# S110138	METRIC ROTATING BELLOWS ASSEMBLY WITH 'L' SHAPED STATIONARY SEAT FOR MYCOM 160 COMPRESSOR	FLEX-A-SEAL, INC. P.O. BOX 184/ 1 JACKSON ST. ESSEX JUNCTION, VT 05453 (802) 878–8307
LOCATION:			
PRODUCT:			
TEMP.:			
PRESSURE:	SPEED:		DRAWING NO.: FS55375
SEAL CODE: 50MM42XXXA4IX4		SCALE: NONE / DRAWN BY: BP / DATE: 6/29/09	

SIZE: 50mm

REV.